Europäisches Patentamt
European Patent Office
Office européen des brevets

URKUNDE

Es wird hiermit bescheinigt, dass für die in der Patentschrift beschriebene Erfindung ein europäisches Patent für die in der Patentschrift bezeichneten Vertragsstaaten erteilt worden ist.

CERTIFICATE

It is hereby certified that a European patent has been granted in respect of the invention described in the patent specification for the Contracting States designated in the specification.

CERTIFICAT

Il est certifié qu'un brevet européen a été délivré pour l'invention décrite dans le fascicule de brevet, pour les Etats contractants désignés dans le fascicule de brevet.

Europäisches Patent Nr. / European patent No. / Brevet européen n°

1600397

Patentinhaber / Proprietor of the patent / Titulaire du brevet

Nichido Kogyo Kabushiki Kaisha
47-11, Satanakamachi 6-chome
Moriguchi-shi,
Osaka 570-0002/JP

München, den
Munich,
Fait à Munich, le

17.09.08

Alison Brimelow

Alison Brimelow

Präsidentin des Europäischen Patentamts
President of the European Patent Office
Présidente de l'Office européen des brevets

EPA/EPO/OEB 2031 07.07

(19) Europäisches Patentamt
European Patent Office
Office européen des brevets

(11) EP 1 600 397 B1

(12) EUROPEAN PATENT SPECIFICATION

(45) Date of publication and mention of the grant of the patent:
17.09.2008 Bulletin 2008/38

(51) Int Cl.:
B65D 63/10 (2006.01)

(21) Application number: **04022225.9**

(22) Date of filing: **17.09.2004**

(54) **Binding band**

Verschlussband

Collier de fermeture

(84) Designated Contracting States:
AT BE BG CH CY CZ DE DK EE ES FI FR GB GR HU IE IT LI LU MC NL PL PT RO SE SI SK TR

(30) Priority: **25.05.2004 JP 2004154157**

(43) Date of publication of application:
30.11.2005 Bulletin 2005/48

(73) Proprietor: **Nichido Kogyo Kabushiki Kaisha**
Moriguchi-shi,
Osaka 570-0002 (JP)

(72) Inventor: **Okamoto, Isao**
Moriguchi-shi,
Osaka 570-0002 (JP)

(74) Representative: **Hofer, Dorothea et al**
Prüfer & Partner GbR
Patentanwälte
Sohnckestrasse 12
81479 München (DE)

(56) References cited:

DE-B- 1 231 614	DE-B- 1 235 220
FR-A- 2 393 512	GB-A- 691 679
GB-A- 190 921 911	US-A- 3 147 522
US-A- 4 951 362	US-B1- 6 325 577

- PATENT ABSTRACTS OF JAPAN vol. 2003, no. 12, 5 December 2003 (2003-12-05) & JP 2003 237823 A (HAMAKOU URETHANE KK), 27 August 2003 (2003-08-27)

EP 1 600 397 B1

Printed by Jouve, 75001 PARIS (FR)

Description

BACKGROUND OF THE INVENTION

Field of the Invention

[0001] The present invention relates to a binding band and more particularly, it relates to a binding band which can be hooked on a wall or a column.

Description of the Background Art

[0002] The conventional binding band is disclosed in Japanese Unexamined Patent Publication No. 2003-237823, for example.

[0003] The binding band comprises a band part having a plurality of long and thin teeth continuously provided in the longitudinal direction, and a framed buckle having a hole at one end of the band part, to which the band part is inserted and a locking tooth which engages with the tooth, at a part of the hole.

[0004] The above document discloses a binding band in which a band part does not easily come off but can be pulled out by a simple operation.

[0005] The conventional binding band was constituted as described above. Although the band part of the binding band was devised in many ways, treatment after binding was not considered.

[0006] DE 1 235 220 B discloses a closing band made from plastic which consists of a strip-shaped band, a closing head at one end of the band, and a ring at the other end of the band. The ring can be secured on the closing head and is used as a grip for opening the closing mechanism.

[0007] US 4,951,362 discloses an elongate bag clamp or cable tie defined by a main strap portion, said strap having a plurality of teeth at a tip end thereof and a low profile strap engaging a locking head integrally formed at the other end thereof.

[0008] US 3,147,522 discloses a tightening device adapted to be tightened in form of a loop about an article which can be used as a closure member for closing the open end of a bag. A gripping portion is provided at one end of the tightening device which allows opening of the loop after tightening by pulling the gripping portion.

[0009] FR 2 393 512 discloses a fixation band having a band part with serrations on lateral sides and a receiving part into which the band part is inserted. A ring-shaped part is provided on one side of the fixation band as a handle for establishing a fixation of the band part in the receiving part and for releasing this fixation.

SUMMARY OF THE INVENTION

[0010] The present invention was made in view of the above problems and it is an object of the present invention to provide a binding band in which treatment after an object is bound by the binding band is considered.

[0011] A binding band according to the present invention comprises the features of claim 1.

[0012] The band part can be inserted in the enclosed-wall part through the slit and the binding band can be hooked at any external position with a pendant hook part provided at one end of the band part.

[0013] As a result, there can be provided the binding band in which treatment after an object is bound with the binding band is considered.

[0014] The slit has a first opening dimension, the band part comprises a neck part having a width dimension smaller than the first opening dimension and a band body having a third width dimension larger than the first opening dimension, and the passage has a width dimension larger than the third width dimension.

[0015] Preferably, the pendant hook part has a fourth width dimension larger than the third width dimension.

[0016] A plurality of continuous teeth are provided in the band body and the enclosed-wall part comprises a locking part which engages with the tooth.

[0017] Still further preferably, the neck part is provided at one end of the band part and between the band body and the pendant hook part.

[0018] Besides, the pendant hook part may be rotated with respect to the band part and is detachable with respect to the band part.

BRIEF DESCRIPTION OF THE DRAWINGS

[0019]

Fig. 1 is a plan view showing a binding band according to the present invention;
Fig. 2 is a side view showing the binding band according to the present invention;
Fig. 3 is a view showing a detail of an enclosed-wall part;
Fig. 4 is a view showing a state in which the binding band is used;
Fig. 5 is a view showing a procedure for passing a band part through the enclosed-wall part;
Fig. 6 is a view showing a procedure for passing the band part through the enclosed-wall part;
Fig. 7 is a view showing another embodiment of a pendant hook part;
Fig. 8 is a view showing another embodiment in which the pendant hook part engages with a neck part; and
Fig. 9 is a view taken from a part shown by arrows IX-IX in Fig. 8.

DESCRIPTION OF THE PREFERRED EMBODIMENTS

[0020] Hereinafter, an embodiment of the present invention is described with reference to the drawings. Fig. 1 is a plan view showing a binding band according to one embodiment of the present invention, Fig. 2 is a sectional view taken from a part shown by arrows II-II in Fig. 1, Fig.

3 is a sectional view taken from a part shown by arrows III-III in Fig. 1. In addition, a part (shown by A) is enlarged so as to be easily understood in Fig. 2.

[0021] Referring to Figs. 1 to 3, a binding band 10 comprises a band part 11, an enclosed-wall part 20 provided at one end of the band part 11, and a hook part 17 provided at the other end of the band part 11. The band part 11 comprises a band body 12 and a neck part 18 provided on the side of the hook part 17 of the band part 11. The neck part 18 has a cylindrical shape and the band part 11 has a flat shape.

[0022] The band part 11 has a predetermined width d2 and a plurality of teeth 15 continuously provided in the longitudinal direction in the flat band body 12 as shown in Fig. 1. Referring to the part shown by A in Fig. 2, the tooth 15 has a vertical surface 15a perpendicular to the surface of the band body 12 and a slanted surface 15b which is gradually decreased in thickness toward the neck part 18.

[0023] The enclosed-wall part 20 has a passage 35 inside, through which the band part 11 is passed. A thickness dimension of the passage 35 is almost the same as that of the band part 11 or slightly larger than that. A slit 33 having a width dimension d1 smaller than the width d2 of the band part 11 is formed at a tip end of the passage 35 in the enclosed-wall part 20. In order to form the passage 35 and the slit 33, the enclosed-wall part 20 comprises a pair of portal wall parts 22a and 22b which are oppositely provided at an interval. A space is provided between the pair of wall parts 22a and 22b and a locking part 24 is provided at the space.

[0024] The locking part 24 is elastically supported on the pair of wall parts 22a and 22b by a support part 31 in a state in which a space part is opened around. In addition, the locking part 24 is arranged so as to intersect with the passage 35.

[0025] Here, the width d1 of the slit 33 is larger than that of the neck part 18. Therefore, the neck part 18 and the subsequent band body 12 of the binding band 10 are passed through the passage 35 of the enclosed-wall part 20 as will be described below with reference to Figs. 4 to 6.

[0026] The locking part 24 has a locking tooth 26 which abuts on the vertical surface 15a of the tooth 15 provided in the band part 11. A rib 27 (refer to Fig. 3) is provided at the locking part 24 so as to retain the locking tooth 26 at a predetermined position with respect to the support part 31.

[0027] As described above, the tooth 15 provided in the band body 12 has the slanted surface 15b which is gradually increased in thickness from the neck part 18 and the vertical surface 15a succeeding to the slanted surface. When the band body 12 is passed through the passage 35, since it engages with the locking part 24 in the increasing order of thickness, an object can be easily bound by pulling the pendant hook 17 which was passed through the passage 35. In addition, once the object is bound and the tooth 15 engages with the locking tooth 26, it is difficult to release the engagement in the reverse direction.

[0028] Next, a description is made of how to use the binding band. Fig. 4 is a view showing a state in which the binding band 10 binds the object and the locking tooth 26 of the locking part 24 engages with the tooth 15 of the band part 11. As shown by an arrow in Fig. 4, the hook part 17 and the neck part 18 are brought close to the enclosed-wall part 20, and the neck part 18 is passed through the slit 33 and then the band body 12 is passed through the passage 35.

[0029] A concrete inserting method is described with reference to Figs. 5 and 6. Fig. 5 is a view showing a state in which the neck part 18 of the binding band 10 is brought close to the slit 33 and Fig. 6 is a view showing a state in which the neck part 18 of the binding band 10 is passed through the slit 33.

[0030] Referring to Figs. 5 and 6, the neck part 18 of the binding band 10 is put in the slit 33 of the enclosed-wall part 20 and then the band part 11 is put through the passage 35. Then, the pendant hook 17 is pulled. As a result, as shown in Fig. 4, the band part 11 is integrated with the enclose-wall part 20. The object bound by the band part 11 is not shown.

[0031] Referring to Fig. 4, since the binding band 10 has the pendant hook part 17, the pendant hook part 17 can be hooked on any projection after the object is bound.

[0032] Next, the pendant hook part 17 is described. As shown in Fig. 1, the pendant hook part 17 is in the shape of a hook. Since the hook part 17 of the binding band 10 is hook-shaped, the binding band 10 can be hooked on any external convex part.

[0033] In addition, instead of the hook-shaped pendant hook part 17, a ring-shaped pendant hook 51 may be used as shown in Fig. 7. In the case of the ring-shaped hook part 51, the binding band 10 can be easily hooked on a projected nail, bar and the like and it is not liable to get unhooked even when it is shaken in some degree.

[0034] Although the pendant hook part 17 is in the shape of a hook on a flat surface of the band part 11 in Fig. 1, the present invention is not limited to this and the hook of the pendant hook part 17 may be faced in any direction with respect to the flat surface of the band part 11.

[0035] Next, another embodiment of the present invention is described. Figs. 8 and 9 show views of anther embodiment of the present invention. Fig. 8 is a sectional view showing a vicinity of a hook part 41 and a neck part 18 according to another embodiment, and Fig. 9 is a view taken from a part shown by arrows IX-IX in Fig. 8.

[0036] Referring to Figs. 8 and 9, the pendant hook part 41 can be rotated in any direction with respect to the neck part 18 and can be dismounted from the neck part 18 in this embodiment.

[0037] Referring to Figs. 8 and 9, the neck part 18 has a cylindrical neck supporting part 48 whose diameter is larger than that of the neck part 18, at its tip end. Meanwhile, the pendant hook part 41 has a hook part fixing

part 42 at a part in which the fixing part 42 engages with the neck part 18.

[0038] As shown in Fig. 9, the hook part fixing part 42 has a neck part supporting part 44 for rotatably retaining the cylindrical neck supporting part 48 at the end on the side of the neck part 18. The neck part supporting part 44 is U-shaped so that the neck part 18 can be dismounted from one direction in its circumferential direction. In addition, a stopper 45 is provided at the hook part fixing part 42 so that the U-shaped configuration may not be rotated in the circumferential direction.

[0039] Since the neck part 18 and the pendant hook part 17 have such configurations, the pendant hook part 17 can be faced in any direction with respect to the direction of the flat part of the band part 11. Furthermore, the pendant hook part 17 may be mounted on the neck part 18 after the object is bound with the binding band and the bound object may be retained at any position.

[0040] Although the description was made of the example in which the pendant hook part is in the shape of a hook or a ring in the above embodiments, the present invention is not limited to the above shapes and any configuration may be employed provided that it can be retained at the outside.

[0041] Furthermore, the description was made of the case in which the neck part is cylindrical in the above embodiments, the present invention is not limited to this and it may be flat or have configuration changed from a flat shape to a cylindrical shape.

[0042] Still further, although the description was made of the case in which the locking tooth is locked after engagement with the tooth in the above embodiments, the present invention is not limited to this and it may be constituted so as to be unlocked and released.

[0043] Although the embodiments of the present invention were made with reference to the drawings, the present invention may not be limited to the illustrated embodiments.

[0044] The present invention can be advantageously used as a binding band which can be hanged on a wall or a column.

Claims

1. A binding band (10) for binding an object comprising:

   a band part (11);
   a pendant hook part (17) provided at one end of said band part (11); and
   an enclosed-wall part (20) provided at the other end of said band part (11) and having a passage (35) through which said band part (11) is vertically passed,
   wherein said enclosed-wall part (20) has a slit (33) through which said band part (11) is inserted into said passage (35) from the side, and
   wherein said slit (33) has a first opening dimension, said band part (11) comprises a neck part (18) having a width dimension smaller than said first opening dimension and a band body (12) having a third width dimension larger than the first opening dimension and
   whereby
   a plurality of continuous teeth (15) are provided on a flat portion of said band body (12),
   said enclosed-wall part (20) comprises a locking part (24) which engages with said teeth (15)
   characterized in that
   said locking part (24) is elastically supported by said enclosed-wall part (20) such that the enclosed-wall part (20) and the binding band (10) are adapted for binding an object and structured for being hooked on a projection with the pendant hook part (17) together with the bound object
   said pendant hook part (17) is detachable with respect to said band part (11).

2. The binding band according to claim 1, wherein said passage (35) has a width dimension larger than the third width dimension.

3. The binding band (10) according to claim 2, wherein said pendant hook part (17) has a fourth width dimension larger than said third width dimension.

4. The binding band according to any one of claims 2 to 3, wherein said neck part (18) is provided at one end of said band part (11) and between said band body (12) and said pendant hook part (17).

5. The binding band (10) according to any one of claims 1 to 4, wherein said pendant hook part (17) can be rotated with respect to said band part (11).

6. Use of a binding band (10) according to claim 1 for binding an object and hooking the pendant hook part (17) of the binding band (10) together with the bound object on a projection.

7. Method of binding and hooking an object comprising the steps of binding an object with a binding band (10) according to claim 1
   whereby said band part (11) is inserted into said passage (35) from the side, and

   - thereafter hooking the pendant hook part (17) of the binding band (10) together with the bound object on a projection.

Patentansprüche

1. Ein Verschlussband (10) zum Binden eines Gegenstands, umfassend

ein Bandteil (11);
ein Einhäng-Hakenteil (17), das an einem Ende des Bandteils (11) vorgesehen ist; und
ein Umschließungswandteil (20), das an dem anderen Ende des Bandteils (11) vorgesehen ist, und das einen Durchgang (35) besitzt, durch welches das Bandteil (11) vertikal hindurchgeführt ist,
wobei das Umschließungswandteil (20) einen Schlitz (33) besitzt, durch welchen das Bandteil (11) in den Durchgang (35) von der Seite eingesteckt ist, und
wobei der Schlitz (33) eine erste Öffnungsabmessung besitzt, das Bandteil (11) ein Halsteil (18) mit einer Breiteabmessung besitzt, die kleiner als die erste Öffnungsabmessung ist, und wobei ein Bandkörper (12) eine dritte Breiteabmessung besitzt, die größer als die erste Abmessung ist, und
wobei
eine Vielzahl von fortlaufenden Zähnen (15) auf einem flachen Abschnitt des Bandkörpers (12) vorgesehen sind,
das Umschließungswandteil (20) ein Verschlussteil (24) besitzt, das in die Zähne (15) eingreift, **dadurch gekennzeichnet, dass**
das Verschlussteil (24) elastisch durch das Umschließungswandteil (20) gehalten wird, so dass das Umschließungswandteil (20) und das Verschlussband (10) zum Binden eines Gegenstands eingerichtet und zum Einhängen auf einem Vorsprung anhand des Einhäng-Hakenteils (17) zusammen mit dem gebundenen Gegenstand aufgebaut sind,
das Einhäng-Hakenteil (17) in Bezug auf das Bandteil (11) abnehmbar ist.

2. Das Verschlussband gemäß Anspruch 1, wobei der Durchgang (35) eine Breiteabmessung besitzt, die größer als die dritte Breiteabmessung ist.

3. Das Verschlussband (10) gemäß Anspruch 2, wobei das Einhäng-Hakenteil (17) eine vierte Breiteabmessung besitzt, die größer ist als die dritte Breiteabmessung.

4. Das Verschlussband gemäß einem der Ansprüche 2 oder 3,
wobei das Halsteil (18) an einem Ende des Bandteils (11) und zwischen dem Bandkörper (12) und dem Einhäng-Hakenteil (17) vorgesehen ist.

5. Das Verschlussband (10) gemäß einem der Ansprüche 1 bis 4, wobei das Einhäng-Hakenteil (17) in Bezug auf das Bandteil (11) drehbar eingerichtet ist.

6. Verwendung eines Verschlussbands (10) gemäß Anspruch 1 zum Binden eines Gegenstands und zum Einhängen des Einhäng-Hakenteils (17) des Verschlussbands (10) zusammen mit dem gebundenen Gegenstand auf einem Vorsprung.

7. Verfahren zum Binden und zum Einhängen eines Gegenstands, umfassend die Schritte:

Binden eines Gegenstands mit einem Verschlussband (10) gemäß Anspruch 1;
wobei das Bandteil (11) in dem Durchgang (35) von der Seite her eingesteckt wird, und
danach das Einhäng-Hakenteil (17) des Verschlussbands (10) zusammen mit dem gebundenen Gegenstand auf einen Vorsprung eingehängt wird.

Revendications

1. Bande de serrage (10) pour serrer un objet comprenant:

une partie en bande (11);
une partie pendante à crochet (17) pourvue au niveau d'une extrémité de ladite partie en bande (11); et
une partie à parois enfermées (20) pourvue au niveau de l'autre extrémité de ladite partie en bande (11) et ayant un passage (35) à travers lequel on fait passer ladite partie en bande (11) verticalement,
où ladite partie à parois enfermées (20) a une fente (33) à travers laquelle ladite partie en bande (11) est insérée dans ledit passage (35) à partir du côté, et
où ladite fente (33) a une première dimension d'ouverture, ladite partie en bande (11) comprend une partie de col (18) ayant une dimension de largeur inférieure à ladite première dimension d'ouverture et un corps de bande (12) ayant une troisième dimension de largeur supérieure à la première dimension d'ouverture et de sorte que
une pluralité de dents continues (15) sont pourvues sur une portion plate dudit corps de bande (12),
ladite partie à parois enfermées (20) comprend une partie de verrouillage (24) qui s'accouple avec lesdites dents (15) **caractérisée en ce que**
ladite partie de verrouillage (24) est soutenue élastiquement par ladite partie à parois enfermées (20) de telle sorte que la partie à parois enfermées (20) et la bande de serrage (10) soient adaptées pour serrer un objet et structurées pour être accrochées à une projection avec la partie pendante à crochet (17) en même temps que l'objet serré
ladite partie pendante à crochet (17) est amovible par rapport à ladite partie en bande (11).

2. Bande de serrage selon la revendication 1, dans laquelle ledit passage (35) a une dimension de largeur supérieure à la troisième dimension de largeur.

3. Bande de serrage (10) selon la revendication 2, dans laquelle ladite partie pendante à crochet (17) a une quatrième dimension de largeur supérieure à ladite troisième dimension de largeur.

4. Bande de serrage selon l'une quelconque des revendications 2 à 3, dans laquelle ladite partie de col (18) est pourvue au niveau d'une extrémité de ladite partie en bande (11) et entre ledit corps de bande (12) et ladite partie pendante à crochet (17).

5. Bande de serrage (10) selon l'une quelconque des revendications 1 à 4, dans laquelle ladite partie pendante à crochet (17) peut être mise en rotation par rapport à ladite partie en bande (11).

6. Utilisation d'une bande de serrage (10) selon la revendication 1 pour serrer un objet et accrocher la partie pendante à crochet (17) de la bande de serrage (10) en même temps que l'objet serré sur une projection.

7. Procédé consistant à serrer et à accrocher un objet comprenant les étapes de
serrer un objet avec une bande de serrage (10) selon la revendication 1
de sorte que ladite partie en bande (11) est insérée dans ledit passage (35) à partir du côté, et
accrocher par la suite la partie pendante à crochet (17) de la bande de serrage (10) en même temps que l'objet serré sur une projection.

FIG.1

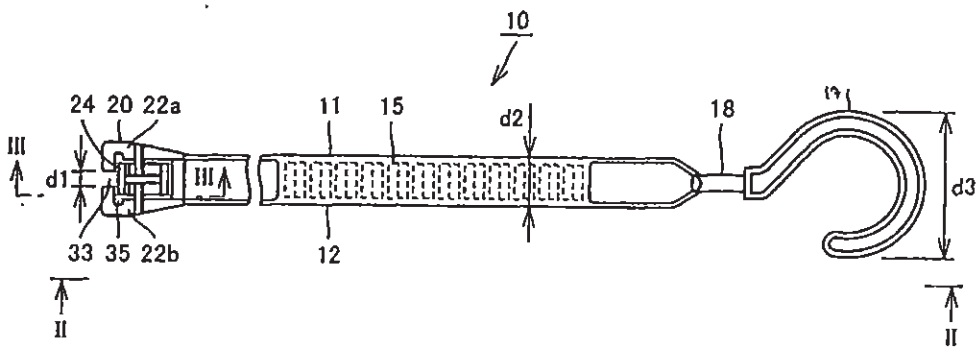

FIG.2

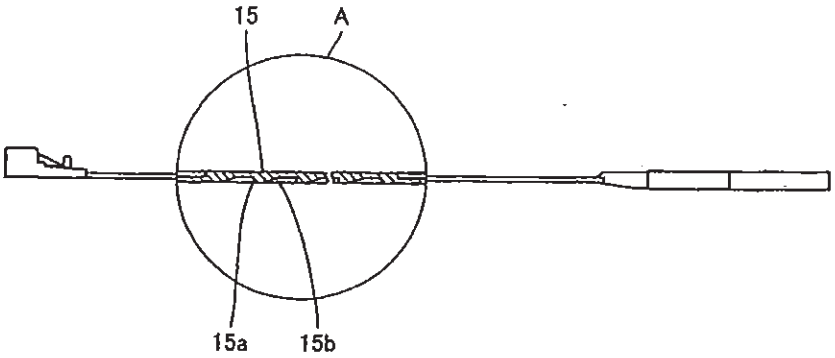

FIG.3

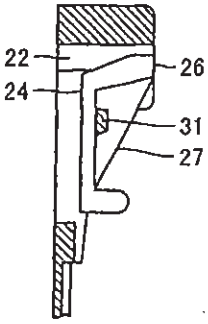

FIG. 4

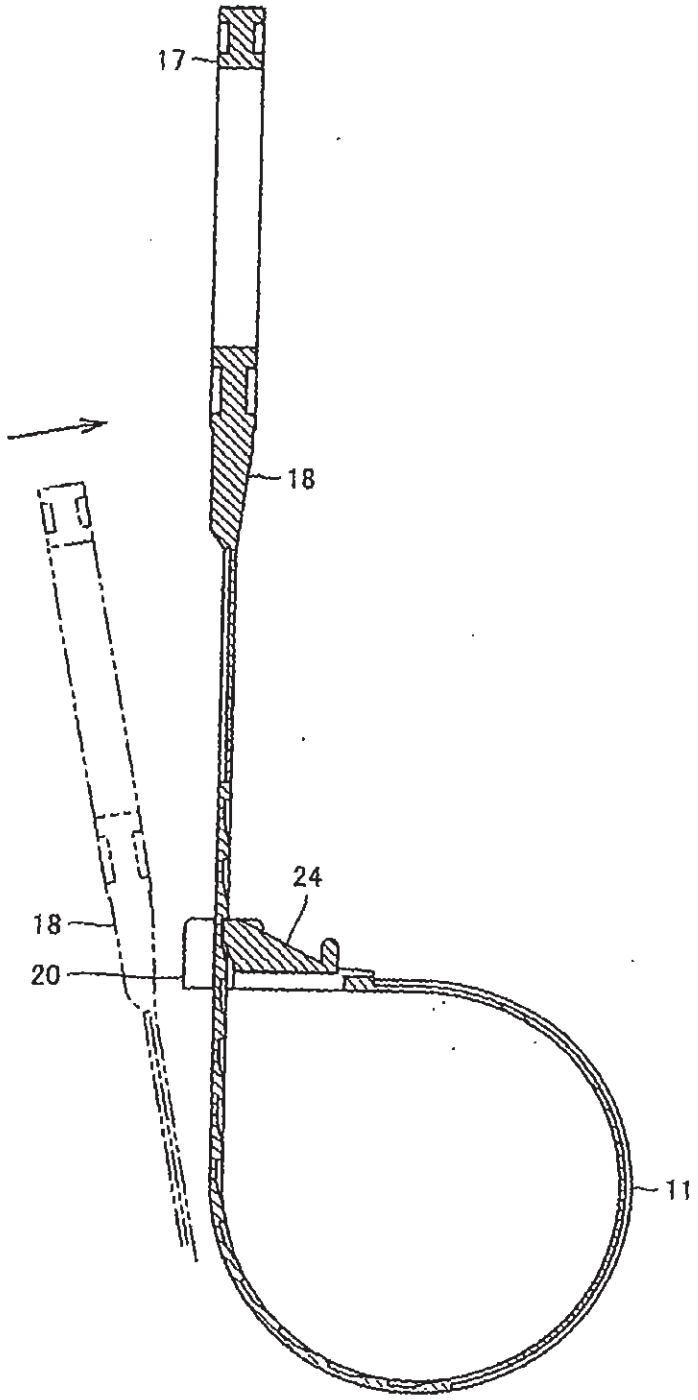

FIG. 5

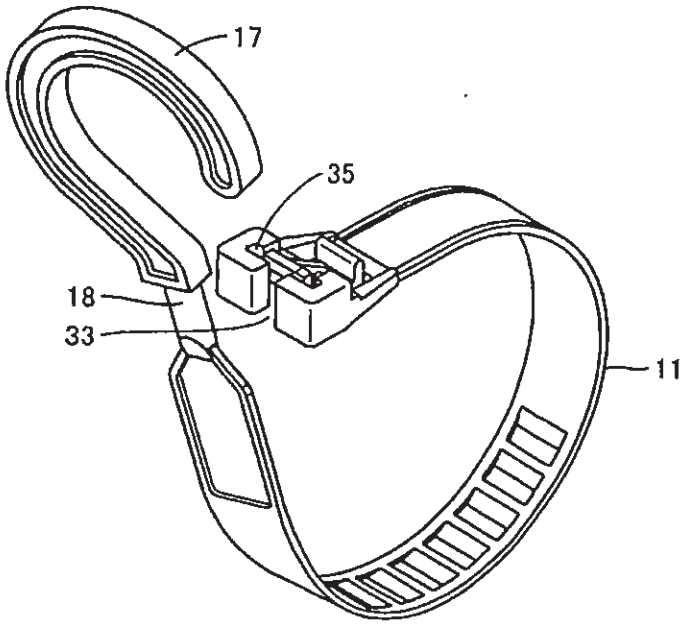

FIG. 6

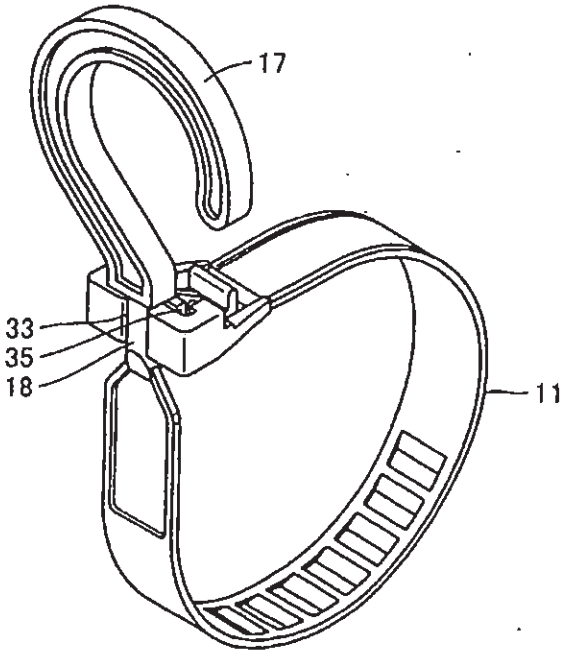

FIG.7

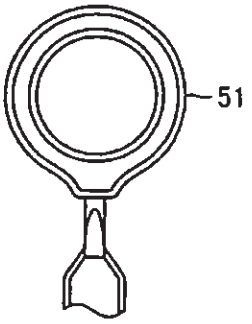

FIG.8

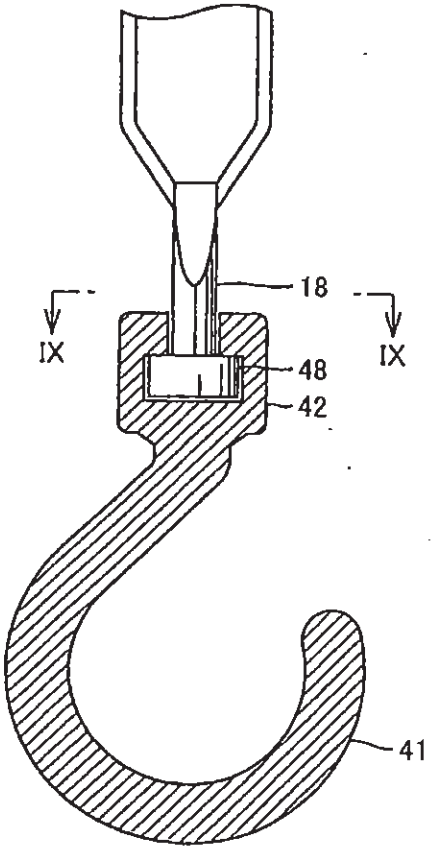

FIG. 9

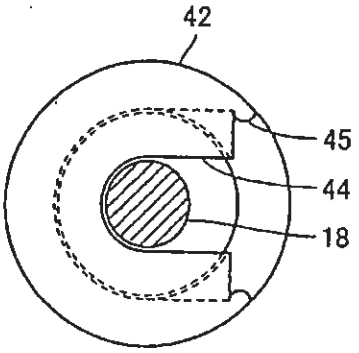

REFERENCES CITED IN THE DESCRIPTION

This list of references cited by the applicant is for the reader's convenience only. It does not form part of the European patent document. Even though great care has been taken in compiling the references, errors or omissions cannot be excluded and the EPO disclaims all liability in this regard.

Patent documents cited in the description

- JP 2003237823 A **[0002]**
- DE 1235220 B **[0006]**
- US 4951362 A **[0007]**
- US 3147522 A **[0008]**
- FR 2393512 **[0009]**